4790 West 73rd Street I Indianapolis, Indiana 46268
Phone: 317-290-8500 I Fax: 317-290-1900
aes2@sbcglobal.net I www.aesrack.com

PROJECT:	LOCATION:
ARCHITECT:	ENGINEER:
CONTRACTOR:	DATE:

Top View

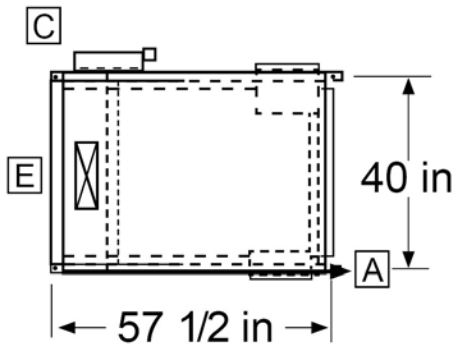

Side View

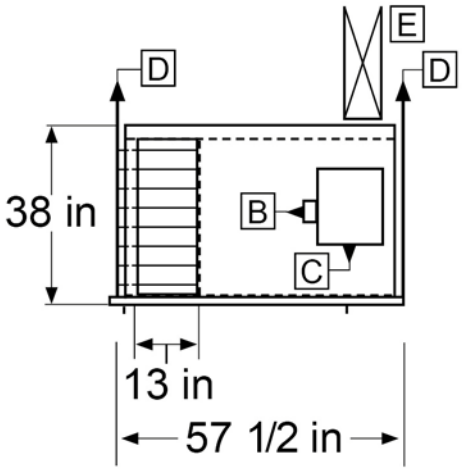

A) (4) ½" MOUNTING HOLES ON CENTER
B) SERVICE SWITCH ELECTRICAL CONNECTION POINT
C) 14" x 16" CONTROL PANEL
D) ⅜" ALL-THREAD HANGING ROD
E) SUPPLY DUCT

- 350 lbs

Front View

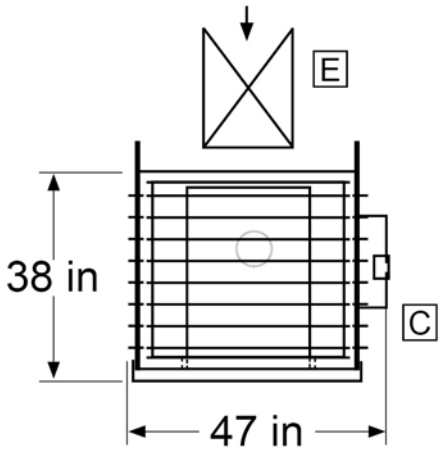

QTY	UNIT MODEL	1/ FAN	HP	AMPS	CFM	SONES	TRANS	VOLTS	F/DISC
1	ER-130	115 / 1	1 / 2	12	9,000	12.7			

QTY	U/MODEL	VOLTS	AMPS	BTU/INPUT	BTU/OUTPUT	FLUE	GAS/CON	G/PRE
1								